COMEUP

Electric Winch
Model: *CWG-30151*

PN: 152085 380V50Hz 157258 415V50Hz
159685 415V50Hz

Introduction

▶ Feature

Lifting capacity:	500 kg wire rope top layer
Lifting height:	58 m
Lifting speed:	12-18 m/min at 50Hz
Brake:	Electromagnetic spring-applied failsafe brake
Control:	Pendant switch powers the winch

▶ Unpacking

- Winch assembly 1pc
- Wire rope 9 mm x 60 m w/weight hook CHW-0005 1pc
- Low voltage control ass'y LV-320 for PN:152085 157258 1pc
- Low voltage control ass'y LV-360 for PN:159685 1pc
- Pendant switch PB-306 w/cord 1.25 mm^2 x 3C x 3 m 1pc

▶ Read this manual carefully

You should carefully read and understand this manual carefully before operating it. Careless winch operation may result in personal injury hazards or property damage.

▶ Information requesting or parts ordering

Please specify the followings information:

- Winch PN
- Serial number
- Part description
- Replacement part number
- Quantity for each part

Installation

Before using the winch, make sure all electrical components have no corrosion or damaged; the environment should be clear and dry.

▶ Performance

Winch Model			CWG-30151								
Motor		kw x p	1.5 x 4								
Recommend Wire Rope		Size(mm)	9								
		Breaking (kg)	3,750								
1st Layer	Rated Load (kg)	50Hz	742	2nd Layer	Rated Load (kg)	50Hz	662	3rd Layer	Rated Load (kg)	50Hz	597
	Speed (m/min)	50Hz	12		Speed (m/min)	50Hz	13.3		Speed (m/min)	50Hz	14.8
	Rope-Winding Cumulating Sum (m)		12		Rope-Winding Cumulating Sum (m)		26		Rope-Winding Cumulating Sum (m)		40
4th Layer	Rated Load (kg)	50Hz	544	5th Layer	Rated Load (kg)	50Hz	500				
	Speed (m/min)	50Hz	16.2		Speed (m/min)	50Hz	18				
	Rope-Winding Cumulating Sum (m)		57		Rope-Winding Cumulating Sum (m)		60				

▶ Wiring Diagram

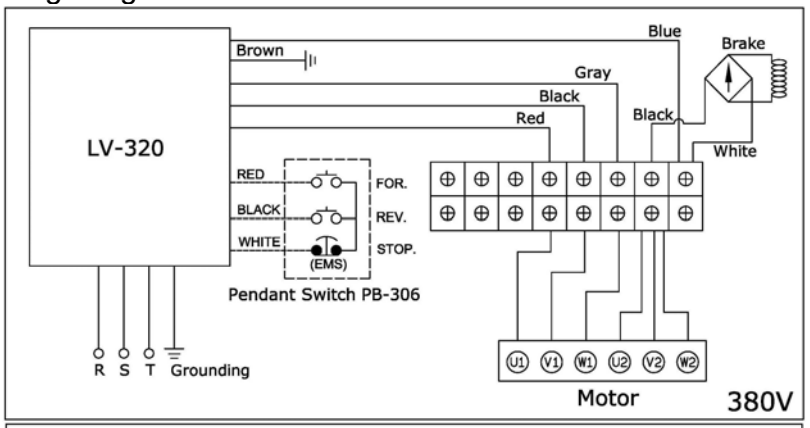

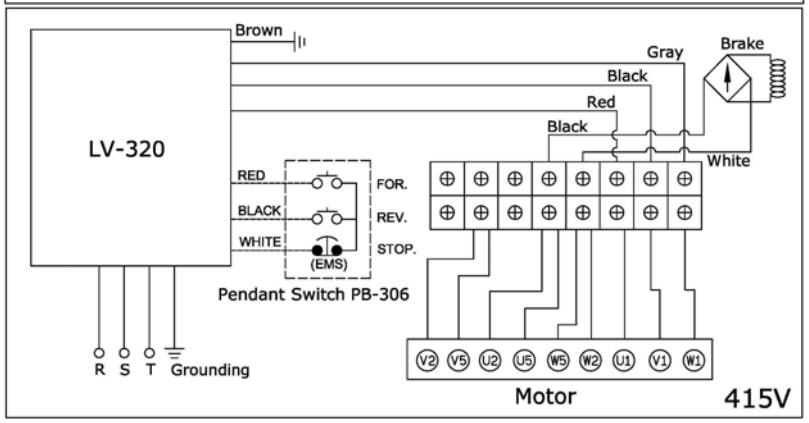

Warning

- The winch is not intended to be used in any manner for the movement or lifting of personnel.
- The lifting capacity shown is based on the top layer of rope on the drum.
- The rope winding on the drum shall remain 5 wraps from the drum.

Parts List

Item No.	Description	Part No.	Qty
1	Induction motor kit ,380V	880827	1
	Induction motor kit ,415V	880828	1
2	Low voltage control ass'y LV-320 for PN:152085	881714	1
	Low voltage control ass'y LV-320 for PN:157258	881716	
	Low voltage control ass'y LV-360 for PN:159685	881717	
2-1	Remote control, PB-306 for PN:152085	881710	1
	Remote control, PB-306	881048	
3	Motor support rack kit	880806	1
4	Drum kit	880807	1
5	Connect shaft kit	880808	1
6	Gearbox support rack kit	880809	1
7	2nd stage carrier kit	881663	1
8	1st stage carrier kit	881664	1
9	Gear box kit	880814	1
10	1st shaft kit	880815	1
11	Gearbox rear cover kit	880816	1
12	Brake base	880817	1
13	Brake disc	880818	1
14	Brake panel	880819	1
15	Brake kit DC200V	882220	1
15-1	Brake disc	882046	1
15-2	Brake coil DC200V	882221	1
17	Brake cover kit	880822	1
18	Wire rope w/weight hook	880823	1
19	Base plate kit for PN:152085	881719	1
	Base plate kit for PN:157258	881720	
	Base plate kit for PN:159685	881721	
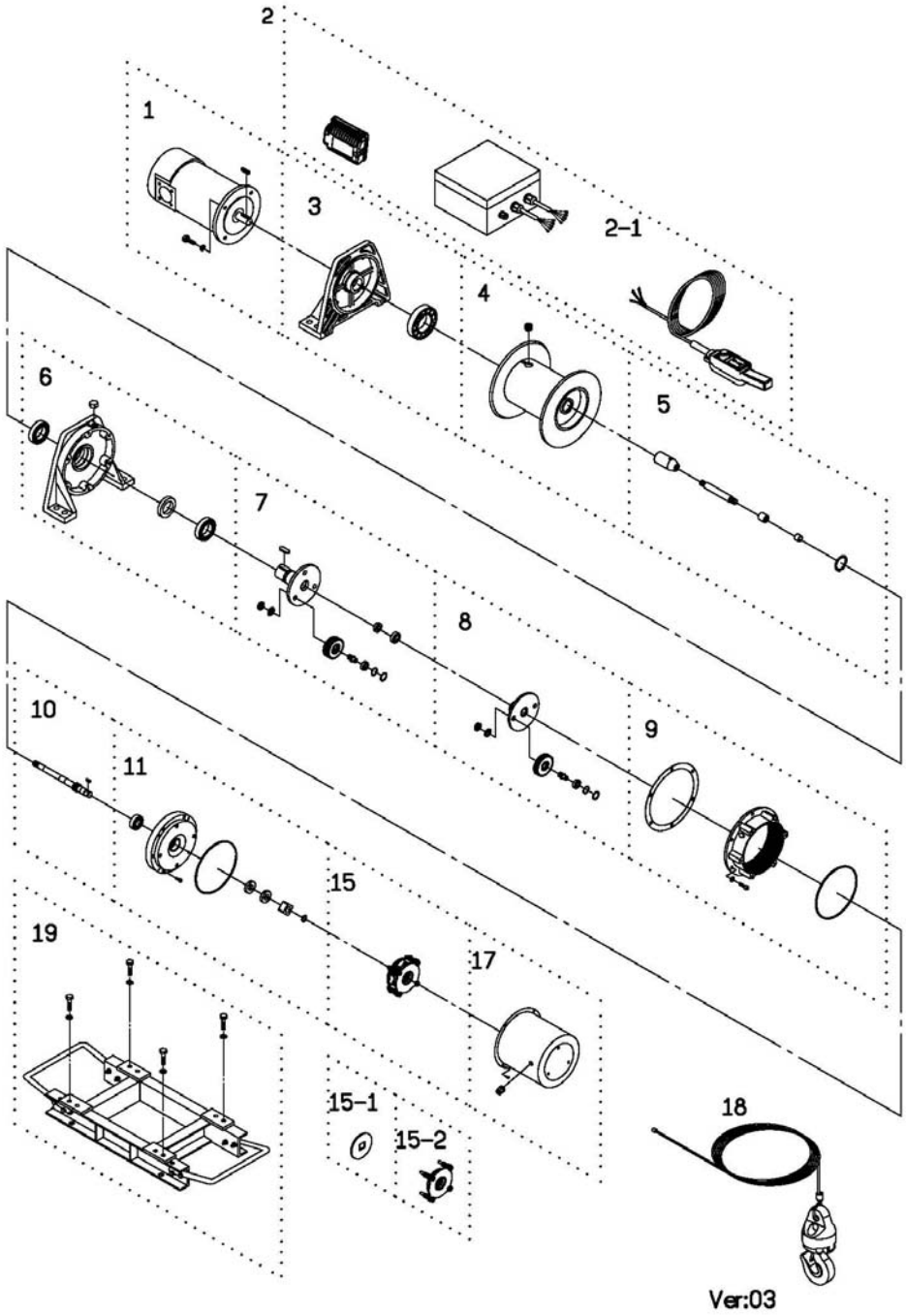
Winch Assembly